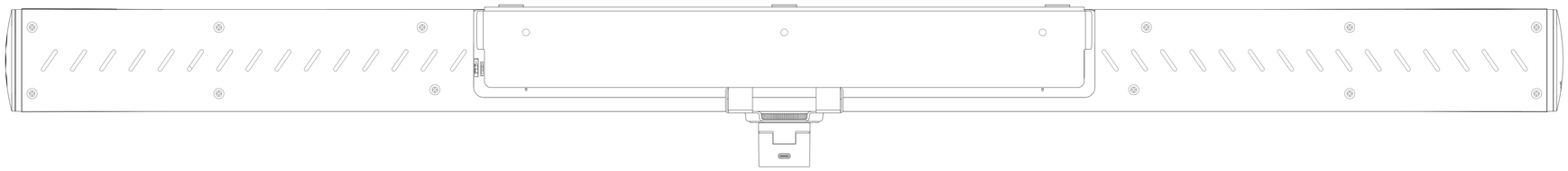

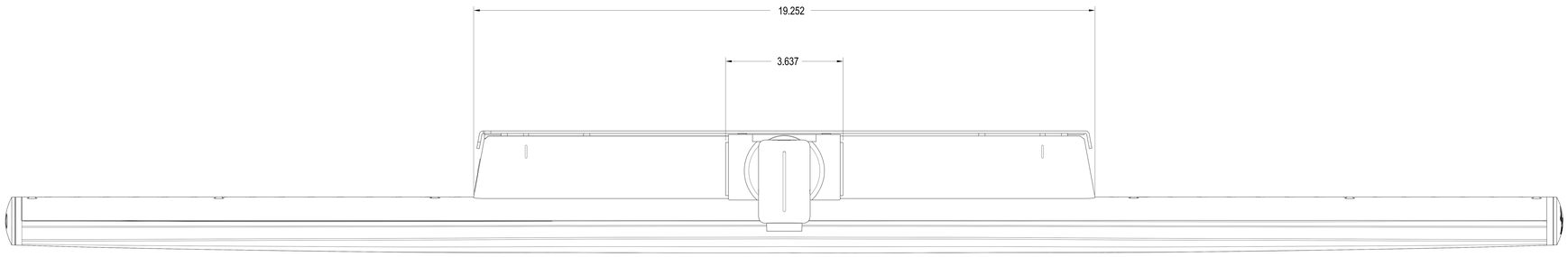

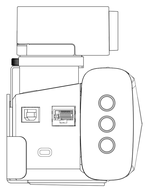

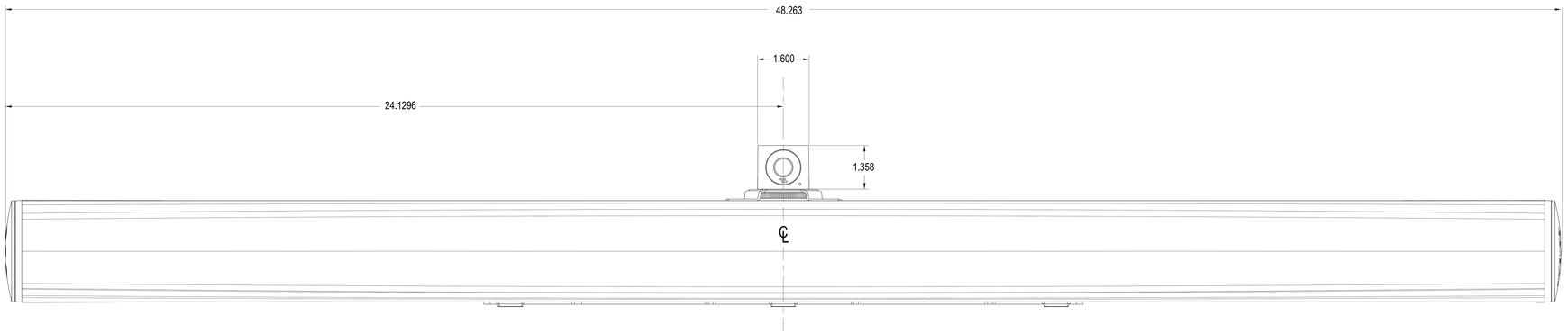

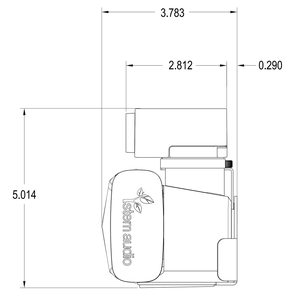

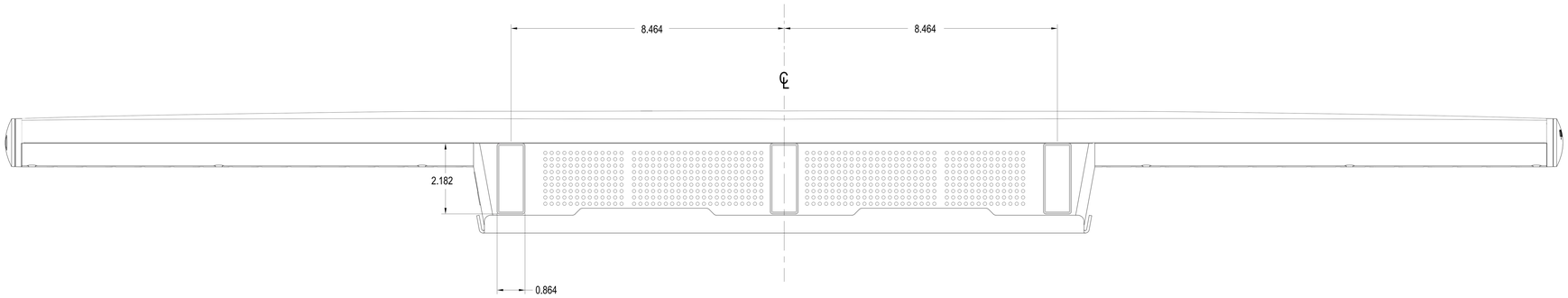

STEM - WALL MOUNTED